VISION PROFILE EXTRUSIONS

Sample Approval Form

Customer: Avanti Industries
Attention: Ralph Jordon
CSR: Helena Botelho

Die #: 15032
Description: S.H.S.S. HANDLED LOCK RAIL
Rigid Colour: WH-115
Flex Colour: N/A
Capstock Colour: N/A

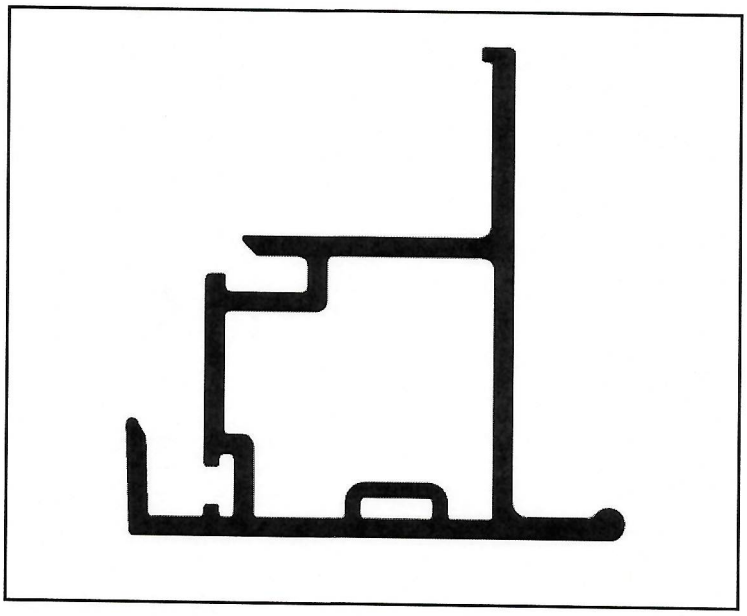

- [x] Approved
- [ ] Approved with Comments
- [ ] Reject (Please Comment)
- [ ] Re-sample (Please Comment)

Comments: _____

Customer Signature:

Customer Name: AVANTI Window & Door LLC
Position: V.P. MANUFACTURING
Signature: _____
Date: 3/2/23

Vision Profile:

QC Manager: Tri Thai
Plant Manager: Pino Consolmagno
Date: February 23, 2023

Notes:

(1) Please sign this form and return to your Customer Service Representative. Keep a copy for your records.
(2) Please sign a one foot sample. Return one (1) to your Customer Service Rep. and retain one (1) for your records.
(3) "Approved" indicated that the samples meet all the specifications required for your proper manufacturing and fabrication purposes. An "Approved" Status indicates Customer consent for Vision Profile to anodize and harden the tooling for production.
(4) "Approved with Comments" indicates that the sample does not meet all the specifications required for your proper manufacturing purposes, however, the issues can be addressed before production begins, without the need for re-sampling. Please consult with Vision Profile for any technical support you may need to address these issues.
(5) If samples are rejected, please explain in the comments section.
(6) If re-sampling is required, please explain in the comments section.

VISION PROFILE EXTRUSIONS

Sample Approval Form

Customer: Avanti Industries
Attention: Ralph Jordon
CSR: Helena Botelho

Die #: 15033
Description: S.H.S.S. SIDE LOAD COMMON SASH
Rigid Colour: WH-115
Flex Colour: N/A
Capstock Colour: N/A

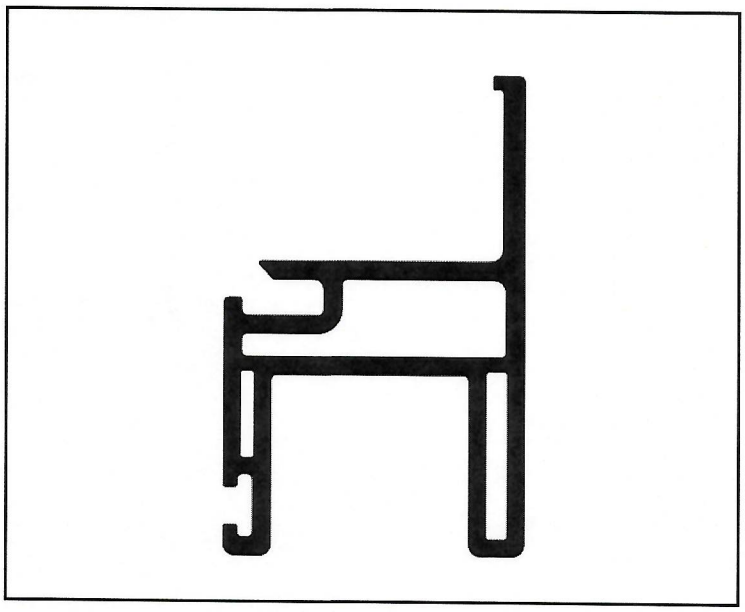

- ☑ Approved
- ☐ Approved with Comments
- ☐ Reject (Please Comment)
- ☐ Re-sample (Please Comment)

Comments: _____

Customer Signature:

Customer Name: AVANTI Window & Door LLC
Position: V.P. Manufacturing
Signature: [signature]
Date: 3/2/23

Vision Profile:

QC Manager: Tri Thai
Plant Manager: Pino Consolmagno
Date: February 23, 2023

Notes:

(1) Please sign this form and return to your Customer Service Representative. Keep a copy for your records.
(2) Please sign a one foot sample. Return one (1) to your Customer Service Rep. and retain one (1) for your records.
(3) "Approved" indicated that the samples meet all the specifications required for your proper manufacturing and fabrication purposes. An "Approved" Status indicates Customer consent for Vision Profile to anodize and harden the tooling for production.
(4) "Approved with Comments" indicates that the sample does not meet all the specifications required for your proper manufacturing purposes, however, the issues can be addressed before production begins, without the need for re-sampling. Please consult with Vision Profile for any technical support you may need to address these issues.
(5) If samples are rejected, please explain in the comments section.
(6) If re-sampling is required, please explain in the comments section.

VISION PROFILE EXTRUSIONS

Sample Approval Form

Customer: Avanti Industries
Attention: Ralph Jordon
CSR: Helena Botelho

Die #: 15035
Description: 0.625" – 0.750" GLAZING BEAD
Rigid Colour: WH-115
Flex Colour: N/A
Capstock Colour: N/A

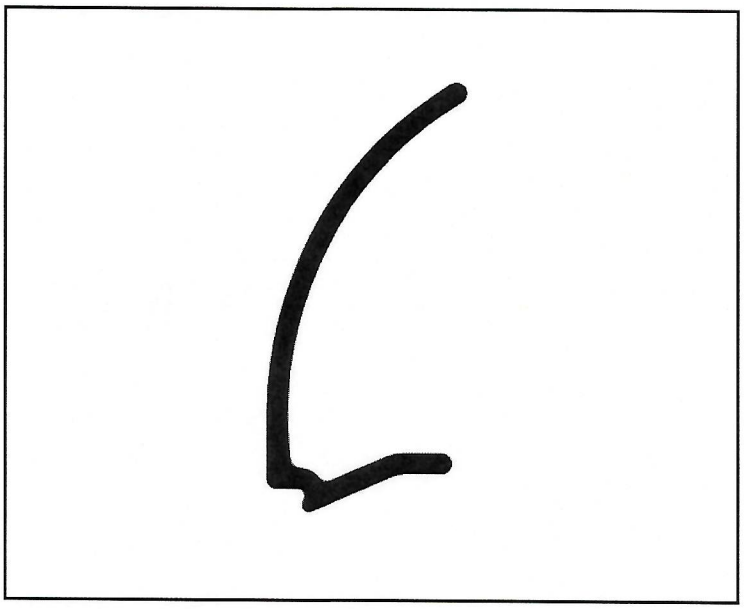

- ☑ Approved
- ☐ Approved with Comments
- ☐ Reject (Please Comment)
- ☐ Re-sample (Please Comment)

Comments: _____

Customer Signature:

Customer Name: AVANTI WINDOW & DOOR LLC
Position: V.P. MANUFACTURING
Signature: [signature]
Date: 3/2/23

Vision Profile:

QC Manager: Tri Thai
Plant Manager: Pino Consolmagno
Date: February 23, 2023

Notes:

(1) Please sign this form and return to your Customer Service Representative. Keep a copy for your records.
(2) Please sign a one foot sample. Return one (1) to your Customer Service Rep. and retain one (1) for your records.
(3) "Approved" indicated that the samples meet all the specifications required for your proper manufacturing and fabrication purposes. An "Approved" Status indicates Customer consent for Vision Profile to anodize and harden the tooling for production.
(4) "Approved with Comments" indicates that the sample does not meet all the specifications required for your proper manufacturing purposes, however, the issues can be addressed before production begins, without the need for re-sampling. Please consult with Vision Profile for any technical support you may need to address these issues.
(5) If samples are rejected, please explain in the comments section.
(6) If re-sampling is required, please explain in the comments section.

VISION PROFILE EXTRUSIONS

Sample Approval Form

Customer: Avanti Industries
Attention: Ralph Jordon
CSR: Helena Botelho

Die #: 15036
Description: FIXED INTERLOCK – 2 5/8" FRAME
Rigid Colour: WH-115
Flex Colour: N/A
Capstock Colour: N/A

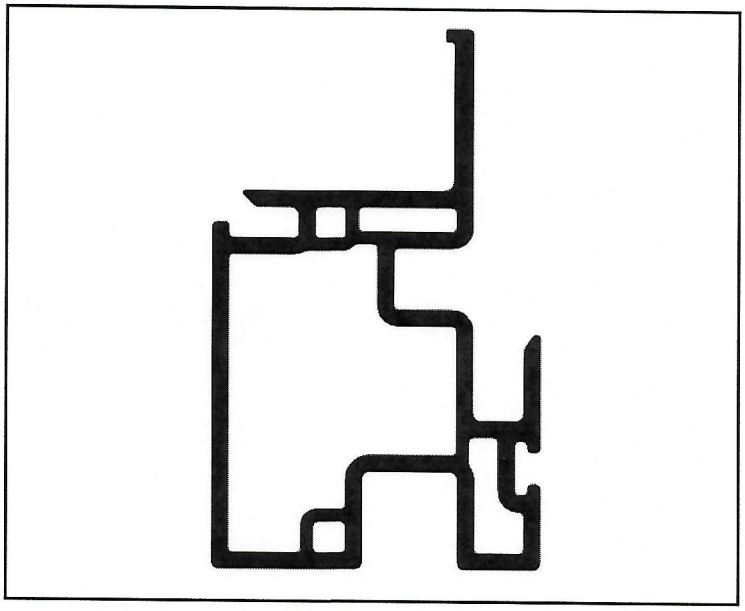

- ☑ Approved
- ☐ Approved with Comments
- ☐ Reject (Please Comment)
- ☐ Re-sample (Please Comment)

Comments: _____

Customer Signature:

Customer Name: AVANTI WINDOW & DOOR LLC
Position: V.P. MANUFACTURING
Signature: [signature]
Date: 3/2/23

Vision Profile:

QC Manager: Tri Thai
Plant Manager: Pino Consolmagno
Date: February 23, 2023

Notes:

(1) Please sign this form and return to your Customer Service Representative. Keep a copy for your records.
(2) Please sign a one foot sample. Return one (1) to your Customer Service Rep. and retain one (1) for your records.
(3) "Approved" indicated that the samples meet all the specifications required for your proper manufacturing and fabrication purposes. An "Approved" Status indicates Customer consent for Vision Profile to anodize and harden the tooling for production.
(4) "Approved with Comments" indicates that the sample does not meet all the specifications required for your proper manufacturing purposes, however, the issues can be addressed before production begins, without the need for re-sampling. Please consult with Vision Profile for any technical support you may need to address these issues.
(5) If samples are rejected, please explain in the comments section.
(6) If re-sampling is required, please explain in the comments section.

VISION PROFILE
EXTRUSIONS

Sample Approval Form

Customer: Avanti Industries
Attention: Ralph Jordon
CSR: Helena Botelho

Die #: 15040
Description: S.H.S.S. SASH POCKET SHIM
Rigid Colour: WH-115
Flex Colour: N/A
Capstock Colour: N/A

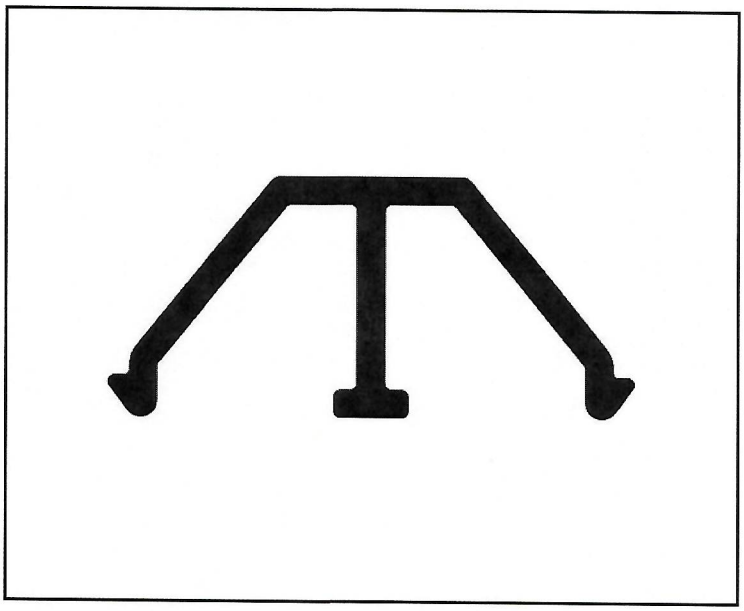

- ☐ Approved
- ☐ Approved with Comments
- ☐ Reject (Please Comment)
- ☐ Re-sample (Please Comment)

Comments: _____

Customer Signature:

Customer Name: AVANTI WINDOW & DOOR LLC
Position: V.P. MANUFACTURING
Signature: [signature]
Date: 3/2/23

Vision Profile:

QC Manager: Tri Thai
Plant Manager: Pino Consolmagno
Date: February 23, 2023

Notes:

(1) Please sign this form and return to your Customer Service Representative. Keep a copy for your records.
(2) Please sign a one foot sample. Return one (1) to your Customer Service Rep. and retain one (1) for your records.
(3) "Approved" indicated that the samples meet all the specifications required for your proper manufacturing and fabrication purposes. An "Approved" Status indicates Customer consent for Vision Profile to anodize and harden the tooling for production.
(4) "Approved with Comments" indicates that the sample does not meet all the specifications required for your proper manufacturing purposes, however, the issues can be addressed before production begins, without the need for re-sampling. Please consult with Vision Profile for any technical support you may need to address these issues.
(5) If samples are rejected, please explain in the comments section.
(6) If re-sampling is required, please explain in the comments section.

VISION PROFILE
EXTRUSIONS

Sample Approval Form

Customer: Avanti Industries
Attention: Ralph Jordon
CSR: Helena Botelho

Die #: 15041
Description: S.H.S.S. POCKET COVER
Rigid Colour: WH-115
Flex Colour: N/A
Capstock Colour: N/A

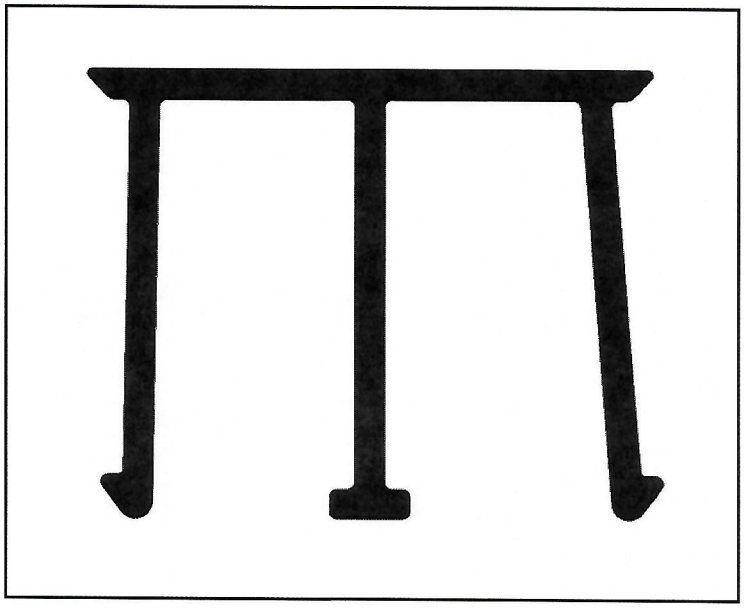

- ☑ Approved
- ☐ Approved with Comments
- ☐ Reject (Please Comment)
- ☐ Re-sample (Please Comment)

Comments: _____

Customer Signature:

Customer Name: Avanti Window & Door LLC
Position: V.P. Manufacturing
Signature: [signature]
Date: 3/2/23

Vision Profile:

QC Manager: Tri Thai
Plant Manager: Pino Consolmagno
Date: February 23, 2023

Notes:

(1) Please sign this form and return to your Customer Service Representative. Keep a copy for your records.
(2) Please sign a one foot sample. Return one (1) to your Customer Service Rep. and retain one (1) for your records.
(3) "Approved" indicated that the samples meet all the specifications required for your proper manufacturing and fabrication purposes. An "Approved" Status indicates Customer consent for Vision Profile to anodize and harden the tooling for production.
(4) "Approved with Comments" indicates that the sample does not meet all the specifications required for your proper manufacturing purposes, however, the issues can be addressed before production begins, without the need for re-sampling. Please consult with Vision Profile for any technical support you may need to address these issues.
(5) If samples are rejected, please explain in the comments section.
(6) If re-sampling is required, please explain in the comments section.

VISION PROFILE EXTRUSIONS

Sample Approval Form

Customer: Avanti Industries
Attention: Ralph Jordon
CSR: Helena Botelho

Die #: 15031
Description: S.H.S.S. HANDLED LIFT SASH
Rigid Colour: WH-115
Flex Colour: N/A
Capstock Colour: N/A

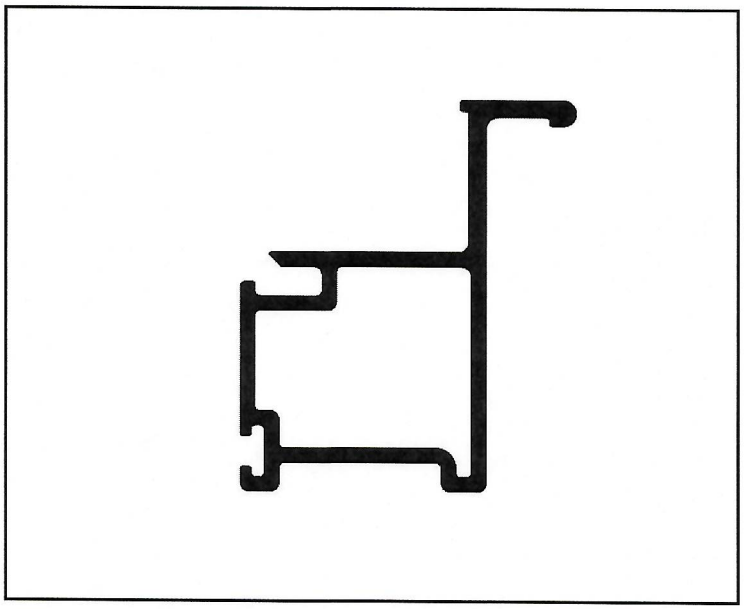

- ☑ Approved
- ☐ Approved with Comments
- ☐ Reject (Please Comment)
- ☐ Re-sample (Please Comment)

Comments: _____

Customer Signature:

Customer Name: AVANTI WINDOW & DOOR LLC
Position: V.P. MANUFACTURING
Signature: [signature]
Date: 3/2/23

Vision Profile:

QC Manager: Tri Thai
Plant Manager: Pino Consolmagno
Date: February 23, 2023

Notes:

(1) Please sign this form and return to your Customer Service Representative. Keep a copy for your records.
(2) Please sign a one foot sample. Return one (1) to your Customer Service Rep. and retain one (1) for your records.
(3) "Approved" indicated that the samples meet all the specifications required for your proper manufacturing and fabrication purposes. An "Approved" Status indicates Customer consent for Vision Profile to anodize and harden the tooling for production.
(4) "Approved with Comments" indicates that the sample does not meet all the specifications required for your proper manufacturing purposes, however, the issues can be addressed before production begins, without the need for re-sampling. Please consult with Vision Profile for any technical support you may need to address these issues.
(5) If samples are rejected, please explain in the comments section.
(6) If re-sampling is required, please explain in the comments section.